SI-9646

LA-9646 Module for MCS12DP

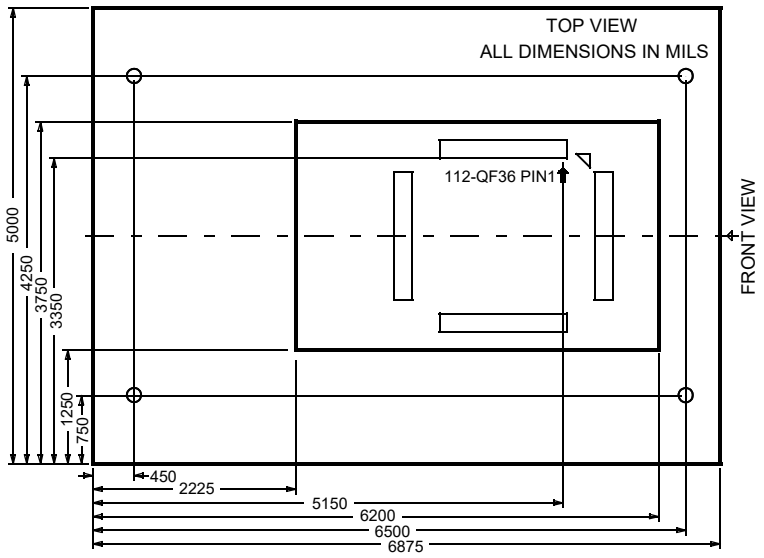

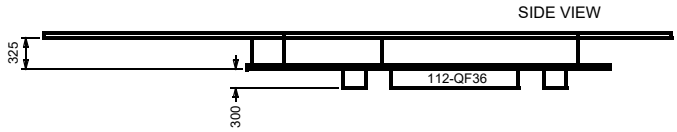

SI-9646

Technical Information

DIMENSION

23.02.22