SI-7612

LA-7612 NEXUS Debugger and Trace for MPC551x

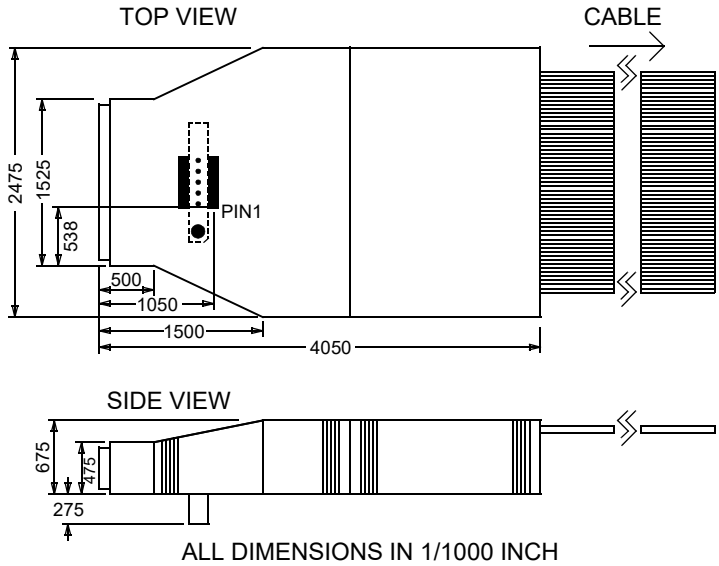

SI-7612

Technical Information

DIMENSION

23.02.22